User's Manual

Purifier® Horizontal Clean Benches

Models
36000 Series
36100 Series
36125 Series

Register your product online at
www.labconco.com/productreg.html
or return the attached card and
receive **FREE LabbyWear™!**

Labconco's Mascot,
Labby the LABster

Protecting your laboratory environment

LABCONCO®

LABCONCO CORPORATION
8811 PROSPECT AVENUE
KANSAS CITY, MO 64132-2696
800-821-5525, 816-333-8811
FAX 816-363-0130
E-MAIL labconco@labconco.com
HOME PAGE www.labconco.com

37736

Product designs are subject to change without notice
© 2001 Labconco Corporation
Printed in U.S.A.

Copyright Information

Copyright © 2002 Labconco Corporation. All rights reserved.

Labconco Corporation
8811 Prospect Avenue
Kansas City, Missouri 64132

The information contained in this manual and the accompanying product are copyrighted and all rights are reserved by Labconco Corporation. Labconco Corporation reserves the right to make periodic design changes without obligation to notify any person or entity of such change.

FlaskScrubber® and SteamScrubber® are registered trademarks of Labconco Corporation.

Warranty

Labconco provides a warranty on all parts and factory workmanship. The warranty includes areas of defective material and workmanship, provided such defect results from normal and proper use of the equipment.

The warranty for all Labconco products will expire one year from date of installation or two years from date of shipment from Labconco, whichever is sooner, except the following:

- Purifier® Delta® Series Biological Safety Cabinets carry a three-year warranty from date of installation or four years from date of shipment from Labconco, whichever is sooner.
- SteamScrubber and FlaskScrubber Glassware Washers carry a two-year warranty from date of installation or three years from date of shipment from Labconco, whichever is sooner.
- Carts carry a lifetime warranty.
- Glassware is not warranted from breakage when dropped or mishandled.

This limited warranty covers parts and labor, but not transportation and insurance charges. In the event of a warranty claim, contact Labconco Corporation or the dealer who sold you the product. If the cause is determined to be a manufacturing fault, the dealer or Labconco Corporation will repair or replace all defective parts to restore the unit to operation. Under no circumstances shall Labconco Corporation be liable for indirect, consequential, or special damages of any kind. This statement may be altered by a specific published amendment. No individual has authorization to alter the provisions of this warranty policy or its amendments. Lamps and filters are not covered by this warranty. Damage due to corrosion or accidental breakage is also not covered.

Limitation of Liability

The disposal and/or emission of substances used in connection with this equipment may be governed by various federal, state, or local regulations. All users of this equipment are required to become familiar with any regulations that apply in the user's area concerning the dumping of waste materials in or upon water, land, or air and to comply with such regulations. Labconco Corporation is held harmless with respect to user's compliance with such regulations.

Contacting Labconco Corporation

If you have questions that are not addressed in this manual, or if you need technical assistance, contact Labconco's Customer Service Department or Labconco's Product Service Department at 1-800-821-5525 or 1-816-333-8811, between the hours of 7:00 a.m. and 6:00 p.m., Central Standard Time.

Visit Labconco's web site at: **http://www.labconco.com** or email Labconco at: **labconco@labconco.com**.

Part #3773600, Rev. B
ECO C627

TABLE OF CONTENTS

CHAPTER 1: INTRODUCTION 1
- About This Manual 2
- Typographical Conventions 3
- Your Next Step 4

CHAPTER 2: PREREQUISITES 7
- Location Requirements 8
- Electrical Requirements 9
- Service Line Requirements 9
- Space Requirements 10
- Overhead Clearance 10
- Your Next Step 10

CHAPTER 3: GETTING STARTED 11
- Unpacking Your Clean Bench 12
- Clean Bench Components 13
- Removing the Shipping Skid 14
- Installing the Clean Bench on an Existing Work Surface 15
- Installing the Clean Bench on a Labconco Base Stand 16
  - Telescoping Base Stands 16
  - Manual or Electric Hydraulic Base Stands 16
- Connecting the Clean Bench to Service Lines 19
- Initial Certification 20
- Your Next Step 21

CHAPTER 4: THEORY OF OPERATION AND SAFETY PRECAUTIONS 23
- HEPA Filters 24
- Laminar Airflow 25
- Motor/Blower 26
- Speed Control 26
- Safety Precautions 27
- Your Next Step 29

CHAPTER 5: USING YOUR CLEAN BENCH 31
- Starting the Clean Bench 31
- Operating the Fluorescent Light 31
- Operating the UV Light 31
- Reading the Pressure Gauge 32

Use of the Clean Bench 32
Safety and Comfort 34
Your Next Step 41

CHAPTER 6: MAINTAINING YOUR CLEAN BENCH 43
Routine Maintenance Schedule 43
Service Operations 44
Resetting the Circuit Breaker 44
Changing the Prefilter 45
Changing the Fluorescent Lamp 46
Changing the UV Lamp 46
Speed Control Adjustment 47
Diffuser Removal 48
HEPA Filter Replacement 49
Motor/Blower Service 51
Motor/Blower Replacement 51
Storage 51
Your Next Step 52

CHAPTER 7: MODIFYING YOUR CLEAN BENCH 53
Installing Additional Service Fixtures 53
Installing the IV Bar 54
Installing the Vinyl Curtain Kit 54
Vibration Isolation Table 55
Your Next Step 55

CHAPTER 8: TROUBLESHOOTING 57

APPENDIX A: CLEAN BENCH COMPONENTS 59

APPENDIX B: DIMENSIONS 61

APPENDIX C: CLEAN BENCH SPECIFICATIONS 63
Electrical Data 63
Motor Specifications 63

APPENDIX D: CLEAN BENCH ACCESSORIES 69
Adjustable Height Base Stands 69
Service Fixture Kit 69
IV Bar Kits 70
Ergonomic Chair 70
Adjustable Footrest 70
Isolation Table 71

APPENDIX E: QUICK CHART FOR THE CLEAN BENCHES 73

APPENDIX F: REFERENCES 75

DECLARATION OF CONFORMITY 77

CHAPTER 1
INTRODUCTION

Congratulations on your purchase of a Labconco Purifier® Clean Bench. Your Clean Bench is designed to protect your product from particulate matter. It is the result of Labconco's years of experience in manufacturing clean benches, and many of its features were suggested to us by users like you.

The Clean Bench offers many features to enhance safety, performance and ergonomics. To take full advantage of them, please acquaint yourself with this manual and keep it handy for future reference. If you are unfamiliar with how clean benches operate, please review *Chapter 4: Theory of Operation and Safety Precautions* before you begin working in the bench. Even if you are an experienced clean bench user, please review *Chapter 5: Using Your Clean Bench*; it describes your Clean Bench's features so that you can use it efficiently.

About This Manual

This manual is designed to help you learn how to install, use, and maintain your clean bench. Instructions for installing optional equipment on your bench are also included.

Chapter 1: Introduction provides a brief overview of the clean bench, explains the organization of the manual, and defines the typographical conventions used in the manual.

Chapter 2: Prerequisites explains what you need to do to prepare your site before you install your clean bench. Electrical and service requirements are discussed.

Chapter 3: Getting Started contains the information you need to properly unpack, inspect, install, and certify your clean bench.

Chapter 4: Theory Of Operation And Safety Precautions explains how the clean bench operates and the appropriate precautions you should take when using the bench.

Chapter 5: Using Your Clean Bench discusses the basic operation of your bench. Information on how to prepare, use and shut down your clean bench is included.

Chapter 6: Maintaining Your Clean Bench explains how to perform routine maintenance on your clean bench. Information on how to safely disinfect the interior of your bench and replace the lamps is included.

Chapter 7: Modifying Your Clean Bench describes how to install the optional equipment on the bench.

Chapter 8: Troubleshooting contains a table of problems you may encounter while using your clean bench including the probable causes of the problems and suggested corrective actions.

Appendix A: Clean Bench Components contains labeled diagrams of all of the components of the clean benches.

Appendix B: Clean Bench Dimensions contains comprehensive diagrams showing all of the dimensions for the 3, 4 and 6 foot models of the clean bench.

Appendix C: Clean Bench Specifications contains the electrical requirements for the clean bench. Wiring diagrams for both the 115V and 230V units are also included.

Appendix D: Clean Bench Accessories lists the part number and descriptions of all of the accessories available for your clean bench.

Appendix E: Quick Chart for the Purifier Clean Benches provides useful operating specifications.

Appendix F: References lists the various resources available.

Typographical Conventions

Recognizing the following typographical conventions will help you understand and use this manual:

- Book, chapter, and section titles are shown in italic type (e.g., *Chapter 3: Getting Started*).
- Steps required to perform a task are presented in a numbered format.
- Comments located in the margins provide suggestions, reminders, and references.
- Critical biosafety information is presented in boldface type in paragraphs that are preceded by the biosafety icon. Failure to comply with the information following a biosafety icon may result in illness or death.

- Critical information is presented in boldface type in paragraphs that are preceded by the exclamation icon. Failure to comply with the information following an exclamation icon may result in injury to the user or permanent damage to your clean bench.

- Critical information is presented in boldface type in paragraphs that are preceded by the wrench icon. These operations should only be performed by a trained certifier or contractor. Failure to comply with the information following a wrench icon may result in injury to the user or permanent damage to your clean bench.

- Important information is presented in capitalized type in paragraphs that are preceded by the pointer icon. It is imperative that the information contained in these paragraphs be thoroughly read and understood by the user.

- Information that is specific to a particular model of clean bench is preceded by a number icon. The 3' icon indicates the text is specific to the 3-foot wide model. The 4' icon indicates the text is specific to the 4-foot model. The 6' icon indicates the text is specific to the 6-foot model.

Your Next Step

If your Purifier Clean Bench needs to be installed, proceed to *Chapter 2: Prerequisites* to ensure your installation site meets all of the requirements. Then, go to *Chapter 3: Getting Started* for instructions on how to install your clean bench and make all of the necessary connections.

If you would like to review how horizontal clean benches operate, go to *Chapter 4: Theory Of Operation And Safety Precautions.*

For information on the operational characteristics of your clean bench, go to *Chapter 5: Using Your Clean Bench.*

If your clean bench is installed and you need to perform routine maintenance on the bench, proceed to *Chapter 6: Maintaining Your Clean Bench.*

For information on making modifications to the configuration of your unit, go to *Chapter 7: Modifying Your Clean Bench.*

Refer to *Chapter 8: Troubleshooting* if you are experiencing problems with your Purifier Clean Bench.

CHAPTER 2
PREREQUISITES

Before you install your clean bench, you need to prepare your site for installation. Carefully examine the location where you intend to install your bench. You must be certain that the area is level and of solid construction. In addition, a dedicated source of electrical power must be located near the installation site.

Carefully read this chapter to learn:

- the location requirements for your installation site.
- the electrical power requirements for your installation site.
- the service line requirements for your installation site.
- the space requirements for your installation site.

Refer to *Appendix C: Clean Bench Specifications* for complete clean bench electrical and environmental conditions, specifications and requirements.

Location Requirements

The Purifier Clean Bench should be located away from traffic patterns, doors, fans, ventilation registers, fume hoods and any other air-handling device that could disrupt its airflow patterns. All windows in the room should be closed. Figure 2-1 shows the optimum location for the bench.

Figure 2-1

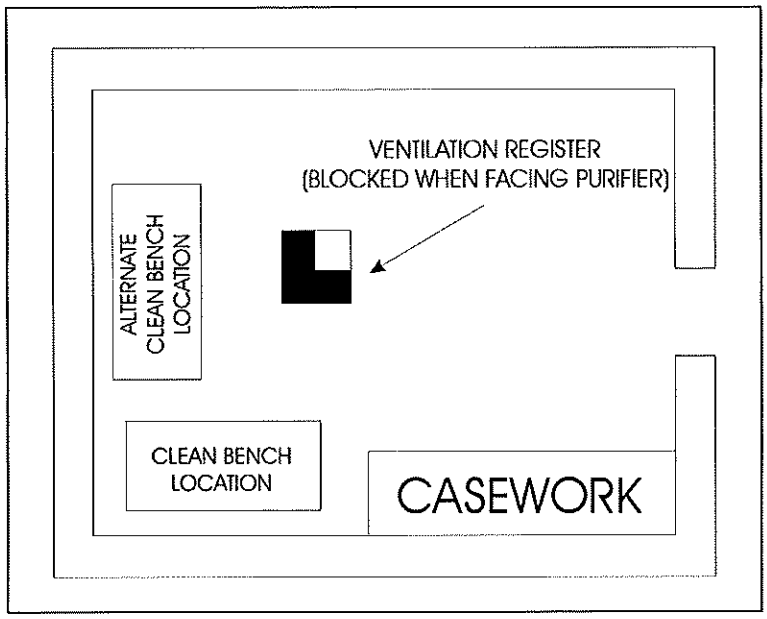

Electrical Requirements

The different Purifier Clean Bench models have the following electrical requirements:

Table 2-1

Model #	Requirements
3600000 through 3600009	115 VAC, 60 Hz, 12 Amps
3600020 through 3600029	230 VAC, 50 Hz, 7 Amps
3612500 through 3612509	115 VAC, 60 Hz, 12 Amps
3612520 through 3612529	230 VAC, 50 Hz, 7 Amps
3610000 through 3610009	115 VAC, 60 Hz, 16 Amps
3610020 through 3610029	230 VAC, 50 Hz, 8 Amps

All Purifier Clean Benches with model numbers ending in 00 through 09 are designed for operation at 115 volts, 60 Hz, alternating current. Clean Benches with model numbers ending in 20 through 29 are designed for operation at 230 +/- 20 volts, 50 Hz alternating current. A dedicated outlet with a circuit breaker rated at 20 amps should be located as close as possible to the right rear side of the bench, at a height even with, or higher than, the bottom of the bench in its final location. If your electrical outlet is distant from this location, contact Labconco's Product Service Department for information on longer cords.

Service Line Requirements

All service lines to the Clean Bench should be quarter inch outside diameter, metal, and equipped with an easily accessible shut-off valve should disconnection be required. If the service line pressure exceeds 40 PSI, it must be equipped with a pressure regulator to reduce the line pressure.

The use of flammable gases or solvents should be avoided in the clean bench. Open flames in the cabinet will disrupt the laminar airflow in the bench. If you feel that your procedure requires the use of an open flame or flammable materials, contact the appropriate safety official.

The use of air or gases under high pressure should be considered carefully as they may seriously disrupt the airflow patterns in the bench.

Space Requirements

The dimensions for the different models are shown in *Appendix B: Clean Bench Dimensions.*

Overhead Clearance

In order for the clean bench to operate properly, there should be at least six inches (150 mm) of clearance from any overhead obstructions when the bench is in its final operating position.

Your Next Step

After you have determined that the location you have selected accommodates the installation and operational requirements of your clean bench, you are ready to begin installation. Proceed to *Chapter 3: Getting Started.*

CHAPTER 3
GETTING STARTED

Now that the site for your clean bench is properly prepared, you are ready to unpack, inspect, install, and certify your unit. Read this chapter to learn how to:

- unpack and move your bench.
- set up the bench.
- connect the electrical supply source.
- connect the service lines.
- arrange certification of your Purifier Horizontal Clean Bench.

Depending upon which model you are installing, you may need common plumbing and electrical installation tools in addition to two 1/2" wrenches, a 7/16" wrench, a flat-blade screwdriver, a Phillips screwdriver, and a carpenter level to complete the instructions in the chapter.

The Purifier Clean Bench models weigh between 300 – 500 lbs. (182-318 kg). The carton allows for lifting with a mechanical lift truck or floor jack. If you must lift the bench manually, use at least six (6) persons and follow safe lifting guidelines.

Unpacking Your Clean Bench

The United States Interstate Commerce Commission rules require that claims be filed with the delivery carrier within fifteen (15) days of delivery.

Carefully unpack your Purifier Clean Bench and inspect it for damage that may have occurred in transit. If your unit is damaged, notify the delivery carrier immediately and retain the entire shipment intact for inspection by the carrier.

DO NOT RETURN GOODS WITHOUT THE PRIOR AUTHORIZATION OF YOUR DEALER AND LABCONCO. UNAUTHORIZED RETURNS WILL NOT BE ACCEPTED.

IF YOUR BENCH WAS DAMAGED IN TRANSIT, YOU MUST FILE A CLAIM DIRECTLY WITH THE FREIGHT CARRIER. LABCONCO CORPORATION AND ITS DEALERS ARE NOT RESPONSIBLE FOR SHIPPING DAMAGES.

Do not discard the carton or packing material for your clean bench until you have checked all of the components and installed and tested the unit.

Do not remove the clean bench from its shipping skid until it is ready to be placed into its final location. Move the unit by placing a flat, low dolly under the shipping skid, or by using a floor jack.

Do not move the bench by tilting it onto a hand truck.

Clean Bench Components

Labconco manufactures clean benches for operation on 115V or 230V. Each of these benches is available in a 3-foot, 4-foot and 6-foot model.

Locate the cabinet model you received in the following group of tables. Verify that the components listed are present and undamaged.

Catalog #	Description
3600000	3 foot Purifier Horizontal Clean Bench, 115 VAC
3600004	3 foot Purifier Horizontal Clean Bench with UV lamp & fixture, 115 VAC
3600020	3 foot Purifier Horizontal Clean Bench, 230 VAC
3600024	3 foot Purifier Horizontal Clean Bench with UV lamp & fixture, 230 VAC
3612500	4 foot Purifier Horizontal Clean Bench, 115 VAC
3612504	4 foot Purifier Horizontal Clean Bench with UV lamp & fixture, 115 VAC
3612520	4 foot Purifier Horizontal Clean Bench, 230 VAC
3612524	4 foot Purifier Horizontal Clean Bench with UV lamp & fixture, 230 VAC
3610000	6 foot Purifier Horizontal Clean Bench, 115 VAC
3610004	6 foot Purifier Horizontal Clean Bench with UV lamp & fixture, 115 VAC
3610020	6 foot Purifier Horizontal Clean Bench, 230 VAC
3610024	6 foot Purifier Horizontal Clean Bench with UV lamp & fixture, 230 VAC

Plus the Following:

Part #	Component Description
3773600	User's Manual
1337100	Power Cord, 3 & 4 foot, 115V
	Or
1334100	Power Cord, 3 & 4 foot, 230V
	Or
1336400	Power Cord, 6 foot, 115V
	Or
1388300	Power Cord, 6 foot, 230V

If you did not receive one or more of the components listed for your clean bench, or if any of the components are damaged, contact the Labconco Product Service Department immediately for further instructions.

Removing the Shipping Skid

LEAVE THE CLEAN BENCH ATTACHED TO ITS SHIPPING SKID UNTIL IT IS AS CLOSE TO ITS FINAL LOCATION AS POSSIBLE. MOVE THE UNIT BY USING A SUITABLE FLOOR JACK, OR BY PLACING A FURNITURE DOLLY UNDERNEATH THE SKID. DO NOT MOVE THE BENCH BY TILTING IT ONTO A HAND TRUCK.

After you verify the clean bench components, move your clean bench to the location where you want to install it. Then, follow the steps listed below to remove the shipping skid from your unit.

To remove the shipping skid:

1. Remove the plastic wrapping and corner posts. Remove the packaging material from the top of the bench.
2. Remove and discard the four bolts that secure the unit to the skid, as shown in Figure 3-1.

Figure 3-1

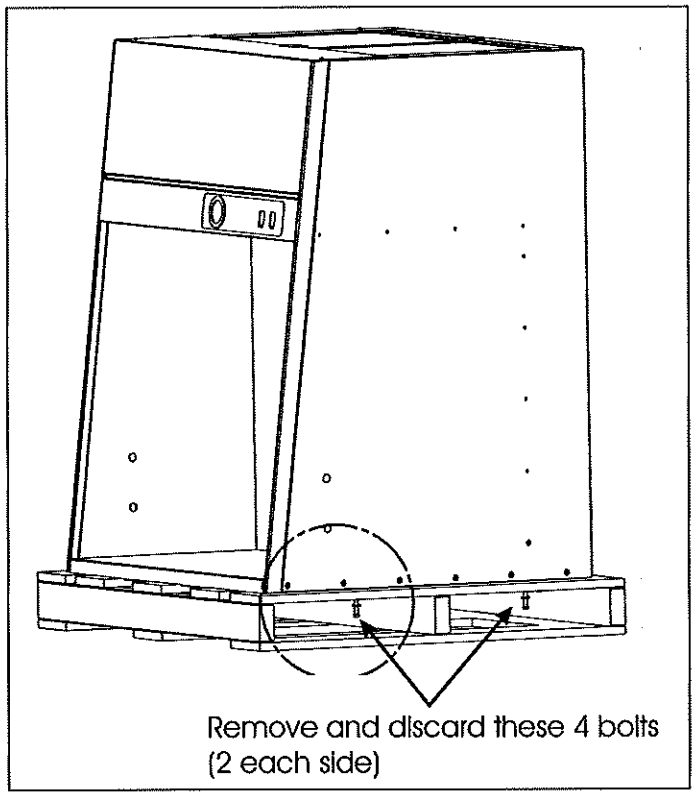

Installing the Purifier Clean Bench On An Existing Work Surface

The clean bench is very top heavy! Use caution when lifting or moving the unit.

When installing the clean bench onto an existing work surface or benchtop, ensure that the structure can safely support the combined weight of the bench and any related equipment. The work surface should be level and at least as wide as the unit and 34 inches deep to properly support the unit.

Installing the Purifier Clean Bench on a Labconco Base Stand

Labconco offers a variety of accessory base stands in a number of different configurations to suit your particular needs. Stands can be ordered with preset telescoping legs, or with a manually or electrically adjustable variable height stand.

Telescoping Base Stands

These stands are available with either fixed feet or caster wheels. The user sets the height of these stands before installation of the Clean Bench. The height can be set at 27.5 to 33.5 inches in 1-inch intervals, giving a work surface height of 28.75 to 34.75 inches. The Base Stands for each Clean Bench model are listed in Table 3-1 below.

Table 3-1

Width	Clean Bench Model #	Base Stand w/Feet Model #	Base Stand w/wheels Model #
3'	36000	3746701	3746711
4'	36125	3746702	3746712
6'	36100	3746704	3746714

Manual or Electric Hydraulic Base Stands

These base stands offer infinitely adjustable height between 25.5 and 33.5 inches, giving a work surface height of 26.75 to 34.75 inches. The height is adjusted either by a manual (hand crank) or electric pump that drives hydraulic rams in the legs of the stands. All of the hydraulic stands are equipped with fixed feet, but can be converted to caster wheels with the addition of caster wheel kit #3784000. The Base Stands for each Clean Bench model is listed in Table 3-2 below.

Table 3-2

Width	Clean Bench Model #	Manual Lift Stand #	Electric (115V) Lift Stand #	Electric (230V) Lift Stand #
3'	36000	3780400	3780300	3780303
4'	36125	3780401	3780301	3780304
6'	36100	3780402	3780302	3780305

When installing the hydraulic lift base stands, ensure that the hydraulic lines and the electrical cord are clear of any obstructions BEFORE installing the Clean Bench on the stand or operating the lift system.

For further information regarding Telescoping Base Stands or other accessories, please contact Labconco's Customer Service Department at 1-800-821-5525 or 816-333-8811 weekdays, between the hours of 7:00 a.m. and 6:00 p.m. CST.

1. Before positioning the Telescoping Base Stand in its final location, decide the final height of the stand. The height of the work surface can be raised in one-inch increments from 28.75 to 34.75 inches.
2. Select the height of the Telescoping Base Stand and slide four (4) leg extensions into base stand corner posts and attach with 2.25" long bolt, flatwasher, lockwasher and nut. Ensure that the same height hole is selected for each leg. Tighten the leg bolts securely. See Figure 3-2.

Figure 3-2

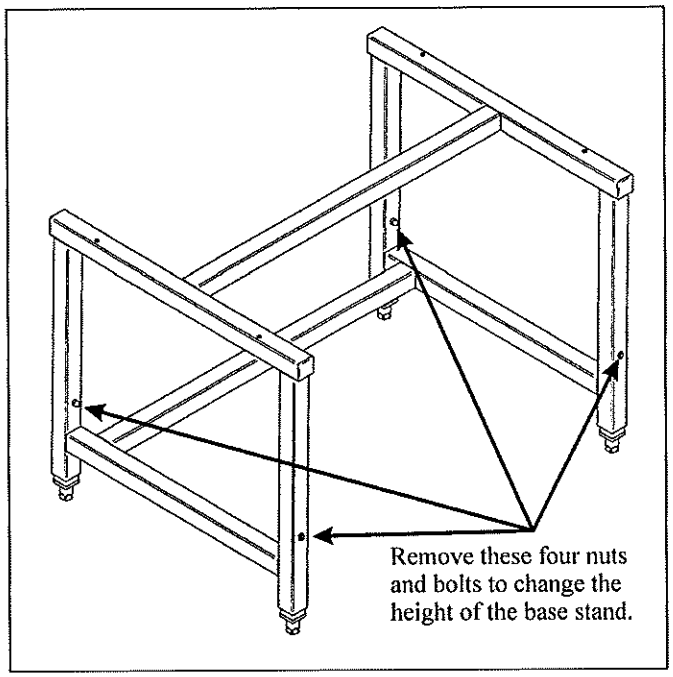

3. Move the base stand into its final location. Using a carpenter's level, adjust each leveling foot until the stand is level in both planes as shown in Figure 3-3. You are now ready to lift the clean bench onto its stand.

Figure 3-3

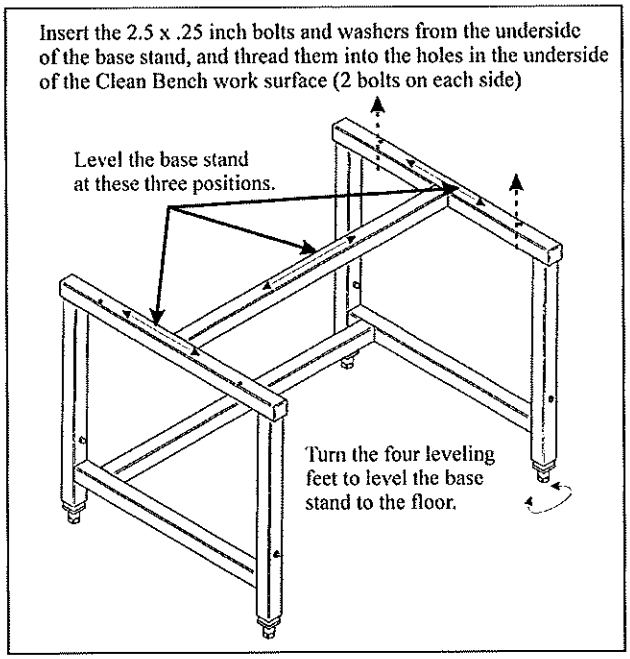

The clean bench is very top heavy!
Use caution when lifting or moving it.

4. Carefully lift the clean bench onto the top rails of the base stand and slide it into position. The rear of the bench should be flush with the rear of the base stand and the sides of the clean bench will overhand the side rails of the base stand approximately 0.25 inches on both sides.
5. Insert the 2.5 inch x 0.25 inch mounting bolts through the hole in the underside of the base stand and secure it with a flatwasher and lockwasher.
6. Repeat steps 5 and 6 for the remaining bolts.
7. Tighten all four bolts securely.

Connecting The Clean Bench to Service Lines

The service lines (if any) should be connected to the tube fitting(s) on the outside of the side wall as shown in Figure 3-4. To install the tubing, follow these steps:

1. Ensure that the tubing is 0.25 inch outside diameter, soft metal, and that the end has been deburred completely. You will need a 0.25 inch tube fitting with a 0.25 inch NPT male thread (not included) to connect the tubing to the valve.
2. Make sure that the tube fitting nut on the fitting is loose, but do not remove it. Look inside the fitting to make sure the tube ferrule is there.
3. Push the tube into the fitting until it is properly seated. The tube will go approximately 0.75 inch into the fitting.
4. Tighten the tube fitting nut hand tight and then, using a 7/16 inch wrench, tighten it at least three quarters turn more.
5. Close the service valve in the clean bench and then slowly open the shutoff valve on the service valve. Inspect the fitting for leakage. Tighten the tube nut slightly if needed.

Figure 3-4

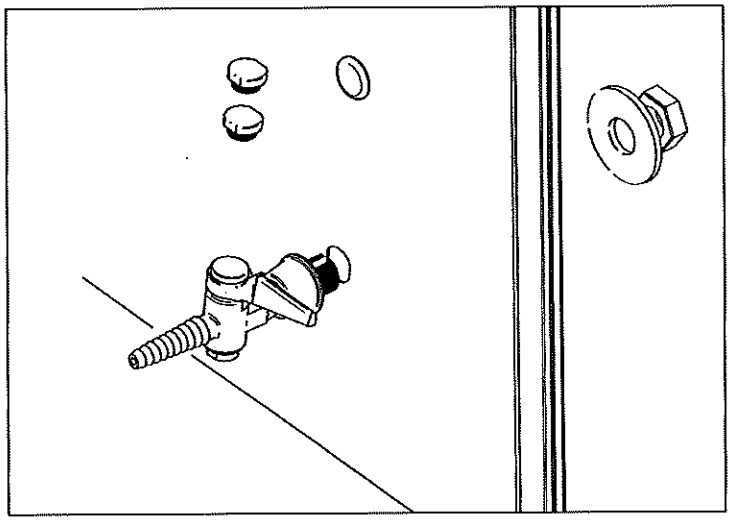

Initial Certification

Prior to use, all Purifier Clean Benches should be certified by a qualified certifier. Under normal operating conditions, the Purifier Clean Bench should be recertified at least annually, and when moved or serviced. The certifier should perform the following tests, as recommended in Institute of Environmental Sciences and Technology, IEST RP-CC0002.2:

- Airflow Velocity Test
- HEPA Filter Leak Test
- Introduction Leak Test/Backstreaming (when appropriate)
- Airborne Particle Count (when appropriate)
- Lighting Intensity Test (when appropriate)
- Noise Level Test (when appropriate)
- Vibration Test (when appropriate)

In addition, the following tests should also be performed at the user's discretion:

- Electrical Leakage and Ground Circuit Resistance Test
- Measurement of Line Voltage and Current
- Smoke Test to determine airflow patterns

If you have any questions regarding certification agencies or need assistance in locating one, contact Labconco's Product Service Department at 1-800-522-7658 or 816-333-8811.

Your Next Step

After your Purifier has been installed and certified, you are ready to proceed to *Chapter 4: Theory Of Operation And Safety Precautions.*

Chapter 4
Theory Of Operation And Safety Precautions

All clean benches operate using the following principles:

- Filtration and retention of particulates by High Efficiency Particulate Air (HEPA) filter(s)
- Laminar airflow

The major components in a clean bench are:

- The HEPA filter
- The motor/blower to force air through the unit
- A speed control for the motor

HEPA Filters

HEPA filters are disposable, dry-type particulate filters. The filter material or media is typically made of borosilicate microfibers that are made into a thin sheet, in a process similar to the production of paper. This sheet is folded, or pleated to increase its surface area. The pleats are held in place by aluminum diffusers or by beads of glue that add rigidity to the media pack. The media pack is then set into a suitable frame, and the perimeter sealed to the filter frame, as shown in Figure 4-1.

The HEPA filter media is very fragile. Do not touch or contact the media surface. If you think the surface of a HEPA filter is damaged, DO NOT USE THE BENCH. Have the HEPA filter integrity tested by a qualified certifier before using the cabinet.

HEPA Filters are only effective against particulate material. Gases will pass through the filter.

Figure 4-1

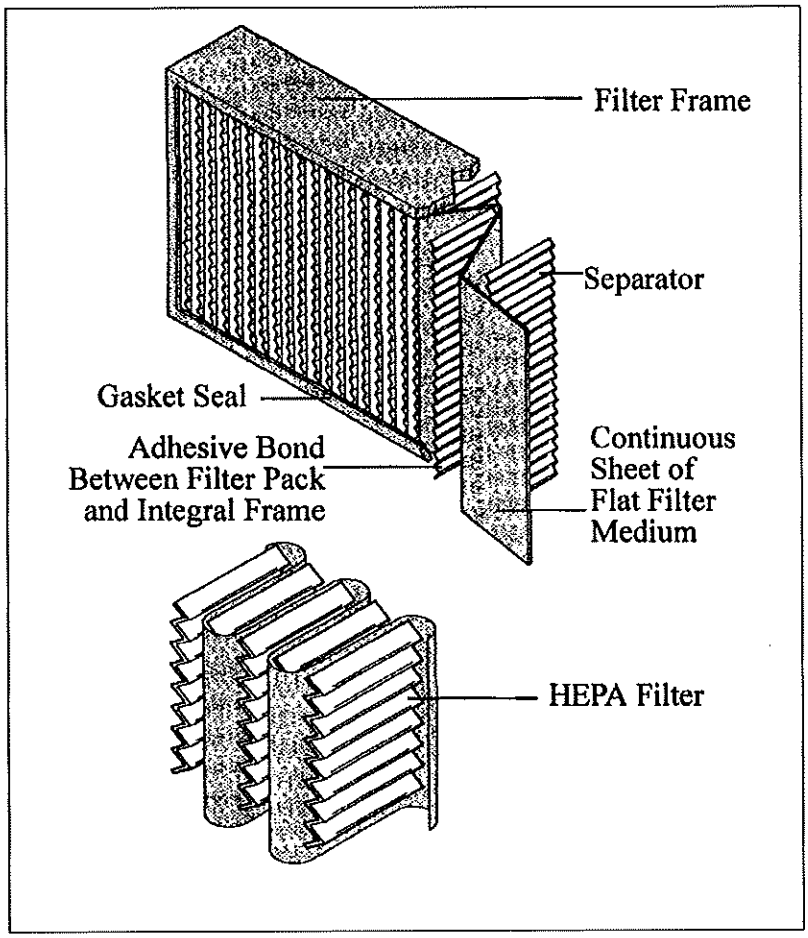

Laminar Airflow

Laminar airflow is defined as the movement of a body of air in a single direction, with a uniform velocity. In practice, the horizontal laminar flow of air in the bench captures any aerosol generated in the work area of the bench, and directs it out of the enclosure. In order to be true laminar flow, a number of individual velocity test points (The Velocity Profile) must be +/- 20 % of the average of all the test points. This is shown graphically in Figure 4-2.

Figure 4-2

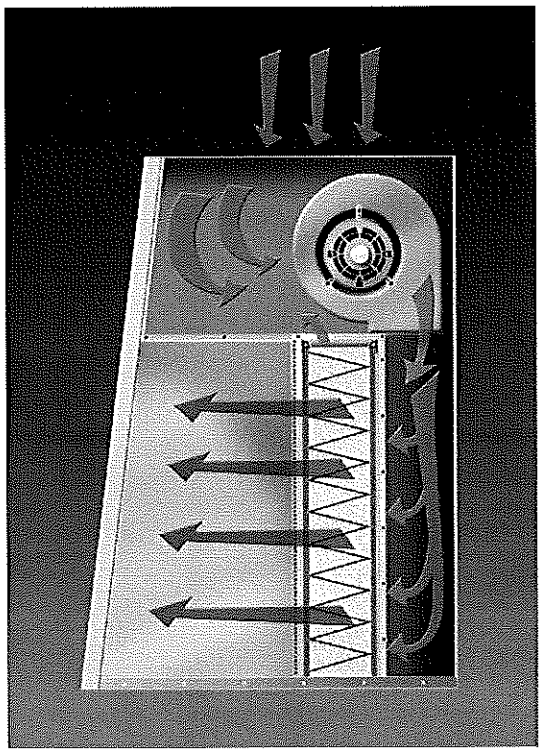

Motor/Blower

The motor/blower assembly pulls air through the prefilters on the top of the bench, and flows through the HEPA filter, which then flows horizontally through the work area.

Speed Control

The speed control should only be adjusted by a qualified certifier.

The speed control is an electronic circuit that allows the certifier to set the motor speed by adjusting its voltage.

Never block or obstruct the air intake on the top of the clean bench.

Safety Precautions

Because air from the work area is dispersed directly into the laboratory, the Purifier Clean Bench should never be used in conjunction with biohazardous material, toxins, or radionuclides. The operator and qualified safety officer(s) must carefully assess the risk associated with any operation performed in a Clean Bench.

The Purifier Clean Bench should be certified by a qualified certification technician before its initial use. The clean bench should be recertified whenever it is relocated, serviced, or at least annually thereafter.

Some components of the Purifier Clean Bench should only be serviced by a qualified certification technician. Ensure that the unit is connected to electrical service in accordance with local and national electrical codes. Failure to do so may create a fire or electrical hazard. Do not remove or service any electrical components without first disconnecting the clean bench from electrical service.

Avoid the use of flammable gases or solvents in the clean bench. An open flame should NOT be used in the clean bench. Open flames may disrupt the airflow patterns in the Clean Bench. Gases under high pressure should not be used in the Purifier Clean Bench, as they may disrupt the airflow patterns.

The surface of the HEPA filter is fragile and should not be touched. Care must be taken to avoid puncturing the HEPA filter during installation or normal operation. If you suspect that the HEPA filter has been damaged, DO NOT use the clean bench; contact a local certification agency or Labconco at 800-821-5525 for recertification information.

THE HEPA FILTER IN THE PURIFIER CLEAN BENCH WILL GRADUALLY ACCUMULATE AIRBORNE PARTICULATE MATTER FROM THE ROOM AND FROM WORK PERFORMED IN THE CLEAN BENCH. THE RATE OF ACCUMULATION WILL DEPEND UPON THE CLEANLINESS OF THE ROOM AIR, THE AMOUNT OF TIME THE CLEAN BENCH IS OPERATING AND THE NATURE OF WORK BEING DONE IN THE CLEAN BENCH. IN TYPICAL INSTALLATIONS AND USAGE, THE HEPA FILTERS WILL LAST TWO TO FIVE YEARS BEFORE REQUIRING REPLACEMENT.

PROPER OPERATION OF THE CLEAN BENCH DEPENDS LARGELY UPON THE CLEAN BENCH'S LOCATION AND THE OPERATOR'S WORK HABITS. CONSULT THE *Installation* AND *Normal Operation* SECTIONS OF THIS MANUAL FOR FURTHER DETAILS.

CLEAN THE INTERIOR SURFACES OF THE CLEAN BENCH WITH MILD HOUSEHOLD DETERGENT. DO NOT USE ABRASIVE CLEANERS, BLEACH OR SOLVENTS, AS THEY MAY DAMAGE THE WORK SURFACE.

Avoid direct exposure to ultraviolet radiation. NEVER work in or near the clean bench when the UV light is on.

WHEN SURFACE DISINFECTING THE PURIFIER:

- AVOID SPLASHING THE DISINFECTING SOLUTION ON SKIN OR CLOTHING.
- ENSURE ADEQUATE VENTILATION.
- CAREFULLY FOLLOW THE MANUFACTURER'S SAFETY INSTRUCTIONS WHEN HANDLING DISINFECTANTS AND ALWAYS DISPOSE OF DISINFECTING SOLUTIONS IN ACCORDANCE WITH LOCAL AND NATIONAL LAWS.

Your Next Step

After you understand the theory of operation and safety precautions, you are ready to proceed to *Chapter 5: Using Your Clean Bench.*

Chapter 5
Using Your Clean Bench

Starting the Clean Bench

To start the Clean Bench, push the blower switch to the "ON" position, as shown in Figure 5-1.

Operating the Fluorescent Light

To turn on the fluorescent light, push the light switch to the "ON" position, as shown in Figure 5-1.

Operating the Optional UV Light

Avoid direct exposure to ultraviolet light. NEVER work in or near the clean bench when the UV light is on.

1. To turn on the UV light, push the light switch to the "UV" position, as shown in Figure 5-4.

The UV light is interlocked to only operate when the blower is off. NEVER attempt to bypass this interlock.

Figure 5-1

Reading the Pressure Gauge

The pressure gauge on the front of the unit displays the total system operating pressure (the negative pressure below the prefilters, plus the positive pressure on the HEPA filter). The pressure gauge reading should be periodically recorded during use. An increase in pressure indicates either prefilter or HEPA filter loading.

Use of the Clean Bench

Planning

- Thoroughly understand procedures and equipment before beginning work.
- Arrange for minimal disruptions, such as room traffic or entry into the room, while the clean bench is in use.

Start-Up

- Turn on fluorescent light and clean bench blower.
- Check the prefilter for obstructions and note the gauge reading.

- Wipe down the interior surfaces of the clean bench with a mild household detergent. DO NOT use abrasive cleaners, bleach or solvents, as they may damage the work surface of the clean bench.
- Allow the clean bench to operate undisturbed for 5 to 15 minutes before loading materials.
- Wear long sleeved lab coat with knit cuffs and over-the-cuff rubber gloves. Use protective eyewear.

Loading Materials and Equipment

- Only load the materials required for the procedure. Do not overload the clean bench.
- Do not obstruct the air diffuser.
- Large objects should not be placed close together.
- After loading the clean bench, wait 2 to 3 minutes to purge airborne contaminants from the work area.

Work Techniques

- Keep all materials at least 4 inches inside of the clean bench and perform all contaminated operations as far to the front of the work area as possible.
- Segregate all clean and contaminated materials in the work area.
- Arrange materials to minimize the movement of contaminated materials into clean areas.
- Keep all discarded contaminated material to the front of the clean bench.
- Avoid moving materials or the operator's hands and arms in and out of the work area during use.
- Avoid the use of an open flame.
- Use proper aseptic technique.
- Avoid using techniques or procedures that disrupt the airflow patterns of the clean bench.

Final Purging

- Upon completion of work, the clean bench should be allowed to operate for 2 to 3 minutes undisturbed, to purge airborne contaminants from the work area.

Wipe-Down

- Wipe down the interior surfaces of the clean bench with a mild household detergent or cleaner and allow to dry.

Shutdown

- Turn off the fluorescent light and clean bench blower.
- Turn on the optional UV light if desired.

Safety and Comfort

Many factors in our work environment determine whether we work efficiently and in a manner that promotes good health and safety. By considering, acting on, and periodically reevaluating the recommendations in this section, it is possible to create a safer, more comfortable, healthful, and efficient work environment.

Working intensely or for a long time in uncomfortable or unnatural positions poses risks.

Organizing Your Adjustments

The order in which you make various adjustments to your body position and work area may vary depending on the adjustability of your furniture.

LABCONCO OFFERS AN ACCESSORY ERGONOMIC CHAIR AND ADJUSTABLE FOOTREST. FOR FURTHER INFORMATION SEE *Appendix D: Purifier Accessories.*

PAY PARTICULAR ATTENTION TO ADJUSTING YOUR POSTURE IN THE AFTERNOON WHEN YOU MAY TEND TO GET FATIGUED.

WHEN YOU REPOSITION ANY ONE PART OF YOUR BODY, YOU MAY NEED TO ADJUST OTHER PARTS AS WELL.

Don't sit in one fixed posture all day.

Feet, Knees, and Legs

Make sure your feet can rest solidly and comfortably on the floor or footrest while sitting. Use an adjustable chair that allows your feet to rest firmly on the floor, or use a footrest. If you use a footrest, be sure it is wide enough to accommodate different leg positions within your comfort zone.

REST YOUR FEET FIRMLY ON THE FLOOR OR A FOOTREST.

Don't dangle your feet and compress your thighs.

Providing Enough Leg Room

Be sure you have sufficient space under your work surface for your knees and legs. Avoid concentrated pressure points along the underside of your thigh near the knee and the backside of your lower leg. Stretch your legs and vary your leg posture throughout the day.

Leg Comfort

Vary your leg positions throughout the day.

Avoid placing boxes or other items under the bench that limit your leg room. You should be able to pull your chair all the way up to your clean bench without interference.

Walk

Get up from your clean bench periodically and take brief walks.

Back

Use your chair to fully support your body. Distribute your weight evenly and use the entire seat and backrest to support your body. If your chair has adjustable low back support, match the contours of the chair's backrest to the natural curve of your lower spine. Always make sure your lower back is well supported. Make sure it feels comfortable in the position in which you are working.

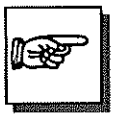

DISTRIBUTE YOUR WEIGHT EVENLY AND USE THE ENTIRE SEAT AND BACKREST TO SUPPORT YOUR BODY.

Don't slouch forward.

Adjust often

If your chair is adjustable, experiment with the adjustments to find numerous comfortable positions, then adjust the chair frequently.

If you are using a chair for the first time, or if you share a chair with someone else, don't assume the settings are properly set for you.

Forearms, Wrists, and Hands

Keep your forearms, wrists, and hands aligned in a straight, natural position. Avoid bending or angling your wrists while working.

Don't Anchor Your Wrists

When working, do not anchor or rest your wrists on the work surface. Resting your palms while working may be harmful because it can cause you to bend your wrists back and can apply pressure to the undersides of your wrists.

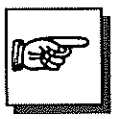

MAINTAIN A STRAIGHT, NATURAL WRIST POSITION WHILE WORKING.

Don't rest your palms on the work surface while working.

Shoulders and Elbows
Adjust your chair height or clean bench height so that your shoulders are relaxed and your elbows hang comfortably at your sides.

Relax
Remember to relax, particularly in areas where muscle tension often builds, such as your shoulders.

Eyes
Working at your clean bench for long periods can be a visually demanding task and may cause your eyes to become irritated and fatigued. Therefore, you should give special attention to vision care, including the following recommendations:

Eye comfort
While working in your clean bench, and also while resting your eyes, remember to blink. This helps keep your eyes naturally protected and lubricated, and helps prevent dryness, a common source of discomfort.

Rest Your Eyes
Give your eyes frequent breaks. Periodically look away from the work area and focus at a distant point. This may also be a good time to stretch, breathe deeply, and relax.

Clean Your Glasses
Keep your glasses/eye protection clean.

Check Your Vision
To be sure that your vision is adequately corrected, have your eyes examined regularly by a vision care specialist. If you wear bifocals or trifocals, you may find monofocal glasses more comfortable for cabinet use.

GIVE YOUR EYES FREQUENT RESTS BY FOCUSING THEM ON A DISTANT POINT.

Positioning Work Materials
Position work materials directly in front of you to avoid twisting your neck and torso. This makes it possible to work with your shoulders relaxed and your upper arms hanging freely at your sides.

Minimizing Your Reach
Arrange your frequently used materials to minimize the distance you reach for them.

Hand Manipulation
Notice how you use your fingers and hands while working. Avoid keeping any unnecessary tension in your thumbs and fingers. Observe whether you have a heavy touch or a light touch while working.

Reaching for Materials
To reach material that is not near your hands, move your whole arm; avoid stretching your fingers and angling your wrists.

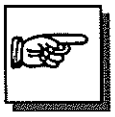

RELAX YOUR THUMBS AND FINGERS WHILE WORKING; NOTICE AND RELEASE EXCESS TENSION.

Don't work with unnecessary tension in your thumbs and fingers.

Wrist Position
Use your whole arm and shoulder to move objects, not just your wrist. Don't rest or anchor your wrist while moving items; keep your wrist, arm, and shoulder free to move.

Aligning Forearms, Wrists, and Hands
When working in the clean bench, keep your forearms, wrists, and hands comfortably aligned with each other in a straight, natural line. Avoid bending or angling your wrists.

Taking Breaks and Varying Your Tasks

As noted earlier, your furniture placement, lab equipment, and lighting are only a few of the factors that determine comfort. Your work habits are also very important. Remember the following:

- Take breaks.
- When you work at your clean bench for long periods, take short breaks at least once per hour and preferably more often. You may find that frequent, short breaks will benefit you more than fewer, longer breaks.
- If you find that you forget to take breaks, use a timer.
- During your breaks, stand up and stretch, especially any muscles and joints you may have held in an extended static posture while working.

Vary Your Tasks

Examine your work habits and the types of tasks you perform. Break up the routine and try to vary your tasks during the day. By doing so, you may avoid sitting in one position or performing the same activities continuously for several hours using your hands, arms, shoulders, neck, or back.

Reduce Sources of Stress

Take an inventory of things at work that are stressful to you. If you perceive that your physical or psychological health is being affected, take time to evaluate what changes you can make to reduce or eliminate the sources of stress.

BREATHE FRESH AIR DEEPLY AND REGULARLY. THE INTENSE MENTAL CONCENTRATION THAT MAY ACCOMPANY WORK IN A CLEAN BENCH MAY TEND TO CAUSE UNEVEN OR SHALLOW BREATHING.

Self-Check

To increase your comfort and reduce potential safety risks, use this checklist to help you evaluate your work posture and habits.

Seated Position

- Have you found a range of seated postures that are most comfortable for you?
- Are you changing postures within your "comfort zone" throughout the day, especially in the afternoon?
- Are your feet firmly planted?
- Are the undersides of your thighs near your knees free of pressure?
- Are the backs of your lower legs free of pressure? Is there sufficient space under your cabinet for your knees and legs?
- Is your lower back supported?

Shoulders, Arms, Wrists, and Hands

- Are your shoulders relaxed?
- Are your hands, wrists, and forearms aligned in a straight, natural position?
- Are your elbows in a relaxed position near your body?
- Are items you use frequently easy to reach?

Eyes

- Do you rest your eyes frequently by focusing on a distant point?
- Do you blink enough?
- Do you get your eyes examined regularly by a vision care specialist?
- If you wear bifocals or trifocals, do you avoid tilting your head back to see your work?

Working Style

- Are you training your fingers to relax when they become tense?
- Do you use your whole arm to reach for objects not located near your fingers?
- Is your work positioned directly in front of you?
- Are your wrists straight and your shoulders relaxed?

General Prevention

- Do you take breaks and walk around briefly, preferably once per hour?
- Do you exercise regularly?
- Periodically, do you take inventory of the stress in your life and change what is within your control to change?

Your Next Step

After you understand how to operate and work in the clean bench, you are ready to proceed to *Chapter 6: Maintaining Your Clean Bench.*

Chapter 6
Maintaining Your Clean Bench

Now that you have an understanding of how to work in the clean bench, we will review the suggested maintenance schedule and the common service operations necessary to maintain your clean bench for peak performance.

Many of the service operations should be performed only by trained and experienced certification technicians. DO NOT attempt to perform these operations if you are not properly trained. The service operations that require qualified certifiers are preceded by the wrench icon.

Routine Maintenance Schedule

Under normal operation, your Purifier Horizontal Clean Bench will require little routine maintenance. The following schedule is recommended:

5. Install new prefilters by reversing the above steps.

Changing the Fluorescent Lamp:

1. Unplug the Purifier Clean Bench.
2. Remove the prefilters as described earlier in this chapter.
3. Remove the front dress panel by removing the four screws located on the top front corners of the panel, and then lifting the panel up and forward.
4. Remove the lamp reflector by gently squeezing the reflector to compress it and then lift the reflector straight up.

3' 4'

5. Remove the lamp by rotating it out of its sockets and pulling it straight up.
6. Make sure that the surface of the new lamp is clean and free of dirt or fingerprints, by cleaning its surface with alcohol or glass cleaner.
7. Install the new lamp by reversing the above steps.

6'

5. Remove the lamp by grasping the plastic endcap on the left end of the lamp. While supporting the center of the lamp, push the endcap towards the left.
6. Lift the right side of the lamp up and out of its socket, and then pull the lamp straight up.
7. Make sure that the surface of the new lamp is clean and free of dirt or fingerprints by cleaning its surface with alcohol or glass cleaner.
8. Install the new lamp by reversing the above steps.

Changing the UV Lamp:

1. Unplug the Purifier Clean Bench.

3' 4'

2. The lamp is located on the underside of the canopy, between the fluorescent lamp and the diffuser. Remove the UV lamp by rotating it out of its sockets and pulling it straight down.
3. Make sure that the surface of the new lamp is clean and free of dirt or fingerprints by cleaning its surface with alcohol or glass cleaner.
4. Install the new lamp by reversing the above steps.

6'

2. The lamp is located on the underside of the canopy, between the fluorescent lamp and the diffuser. Remove the UV lamp by grasping the plastic endcap on the left end of the lamp. While supporting the center of the lamp, push the endcap towards the left.
3. Allow the right side of the lamp to drop out of its socket, then pull the lamp straight down.
4. Make sure that the surface of the new lamp is clean and free of dirt or fingerprints by cleaning its surface with alcohol or glass cleaner.
5. Install the new lamp by reversing the above steps.

The service operations listed in the rest of this chapter should only be performed by a qualified certifier.

Speed Control Adjustment:

Adjusting the speed control will have an effect on the air velocities and the effectiveness of the clean bench. Only a qualified certification technician, as part of the recertification process, should adjust the speed control.

1. Remove the prefilters as described on page 43.
2. Locate the speed control. It is to the left of the blower on 3-foot and 4-foot models, and between the blowers on the 6-foot model.
3. Using a medium-sized, straight blade screwdriver turn the speed control screw clockwise to decrease the blower speed as shown in Figure 6-2.

Figure 6-2

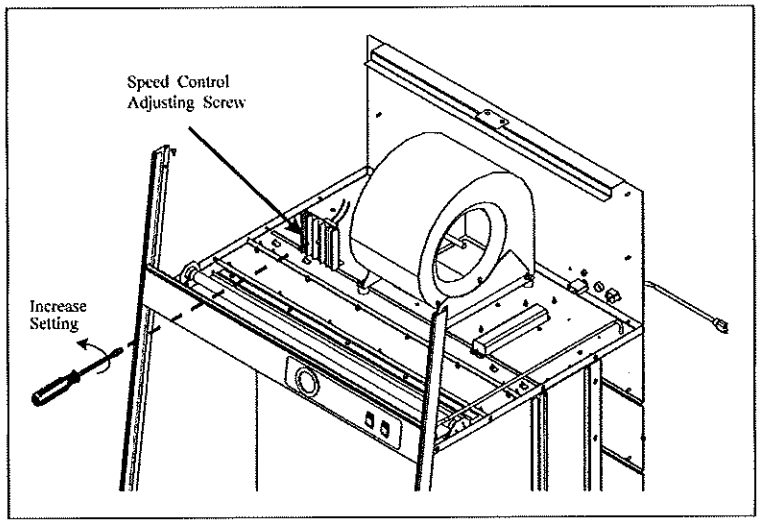

4. After completing the speed control adjustment, establish the average air velocity, using a calibrated thermal anemometer with an accuracy of ± 3%. Establishing a boundary of 6 inches from the sides, top and bottom, measure the velocities in 6-inch increments, 6 inches in front of the diffuser. This methodology is more fully defined in the IEST recommended practice #IEST-RP-CC0002.2
5. The average velocity should be 90 ± 10 FPM, with all measured values falling within ± 20% of the average.
6. Reinstall the prefilters.

Diffuser Removal:

1. Locate and remove the diffuser screws, shown in Figure 6-3. Pull the diffuser straight out.

Figure 6-3

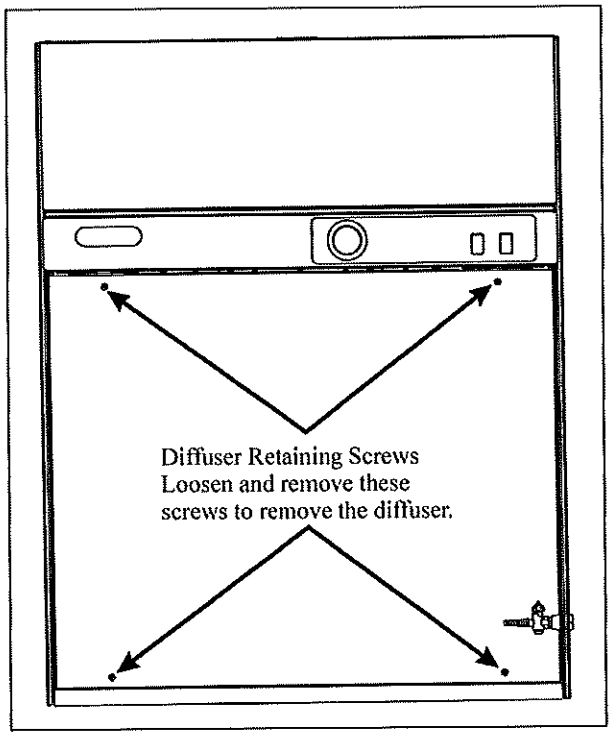

HEPA Filter Replacement:

The HEPA filter should only be serviced by a qualified certification technician. Following replacement of the HEPA filter, a qualified certification technician MUST recertify the clean bench.

1. Unplug the clean bench.
2. Remove the diffuser as described above.
3. Loosen and remove the filter clamps.

THE TOP AND BOTTOM FILTER CLAMPS ARE DIFFERENT ASSEMBLIES. THE BOTTOM CLAMP ASSEMBLIES ARE DARK IN COLOR, WHILE THE UPPER CLAMPS ARE LIGHTER.

4. Gently pull out the Secondary HEPA filter gasket on the top and both sides of the HEPA filter as shown in Figure 6-4. Save the gasket for

reinstallation. Remove the stainless steel clamp angle placed between the clamps and the frame of the HEPA filter.

Figure 6-4

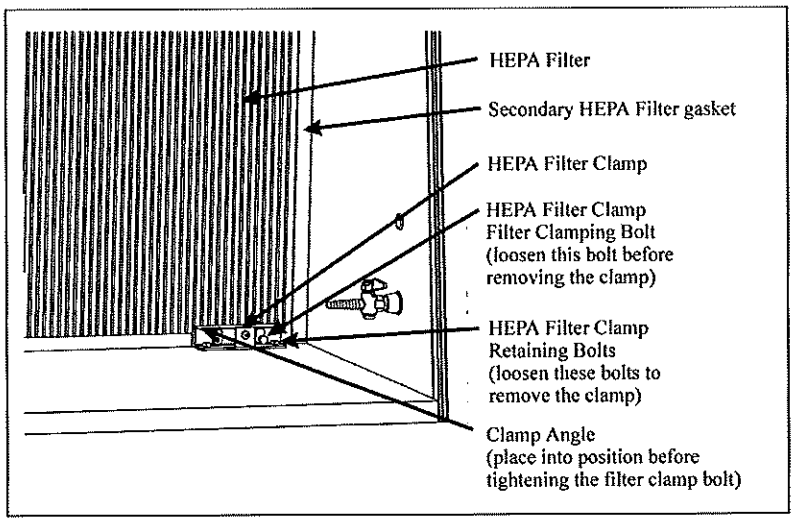

5. Remove the filter by pulling it straight out of the Purifier.
6. Install the new filter by placing the filter back into the clean bench. Make sure that the HEPA filter is centered side-to-side in the Purifier. Reinstall the stainless steel plates on the HEPA filter frame.
7. Install the secondary HEPA filter seal, ensuring that the seal is in place completely around the sides and top of the filter frame.
8. Install the HEPA filter clamps, with the darker colored clamps on the bottom of the filter, and the lighter colored clamps on the top. Tighten the clamp bolt until the filter gasket is compressed approximately 50% or 1/8 of an inch. Plug the clean bench back in.
9. Test the filter for leakage as described in IEST recommended practice #IEST-RP-CC0002.2.
10. Reinstall the diffuser.
11. Establish the average velocity of the filter. It should be 90 ± 10 FPM, with all values falling within ± 20% of the average.

Motor/Blower Service:

THE MOTOR BEARINGS ARE PERMANENTLY LUBRICATED AND SEALED. NO FURTHER LUBRICATION IS NEEDED.

Motor/Blower Replacement:

A QUALIFIED CERTIFICATION TECHNICIAN SHOULD SERVICE THE MOTOR/BLOWER. FOLLOWING REPLACEMENT OF A MOTOR/BLOWER, A QUALIFIED CERTIFICATION TECHNICIAN MUST RECERTIFY THE CLEAN BENCH.

1. Unplug the clean bench.
2. Remove the prefilters, as described earlier.
3. Using a Phillips screwdriver, remove the front dress panel by removing the four screws that secure it on the top of the unit.
4. Disconnect the motor wires from the wiring harness and disconnect the ground wire.

The motor/blower assembly is heavy. Lift and handle it with care.

5. Using a 7/16 inch wrench, remove the four nuts that secure the blower to its isolation mounts.
6. To replace the motor, reverse the above steps.
7. Recertify the unit before use.

Storage

IF THE CLEAN BENCH IS TO BE LEFT UNUSED FOR MORE THAN ONE MONTH THE UNIT SHOULD BE PREPARED FOR STORAGE.

1. Unplug the clean bench.
2. Cover and seal the prefilter and the work area opening with plastic sheeting.

The clean bench should not be stored in areas of excess humidity or temperature extremes. If the clean bench is moved during storage, it should be recertified before use.

Your Next Step

After you understand the maintenance procedures, you are ready to proceed to *Chapter 7: Modifying Your Clean Bench.*

Chapter 7
Modifying Your Clean Bench

There are several ways to modify your clean bench for your individual requirements. These include the addition of service fixtures, intravenous (IV) bar, a vinyl curtain or a vibration isolation table.

Installing Additional Service Fixtures

Additional service fixtures may be installed in any of the two available service fixture holes on the right side wall. The service fixture kit is catalog number 3773700. To install the service fixture:

1. Determine location for the service fixture.
2. Follow the instructions enclosed with the service fixture kit.

Do not use excessive force in attempting to remove the hole plug. Damage to the side wall of the bench could occur.

Installing the IV Bar

1. Locate the screws already installed in the underside of the canopy, located between the UV light and the diffuser.

   3' 4'

   On 3- and 4-foot units, there will be four screws for the IV bar.

   6'

   On 6-foot models, there are a total of eight screws for two IV bars.

2. Remove and save these screws from the canopy. Placing the screws through the holes in the IV bar, tighten the screws, securing the IV bar in place.

Installing the Vinyl Curtain Kit

The vinyl curtain kit allows the user to close off the work area of the clean bench when not in use.

1. Before beginning, identify the kit you have selected.

Width	Catalog #
3'	3773800
4'	3773801
6'	3773802

2. Turn off the clean bench.
3. Clean the front edge of the work surface and the lower edge of the front. Attach the self-adhesive Velcro® strips to the front of the work surface and to the dress panel, as shown in Figure 7-1.
4. Place the vinyl curtain in position and press the Velcro strips together to secure the curtain in place.

Figure 7-1

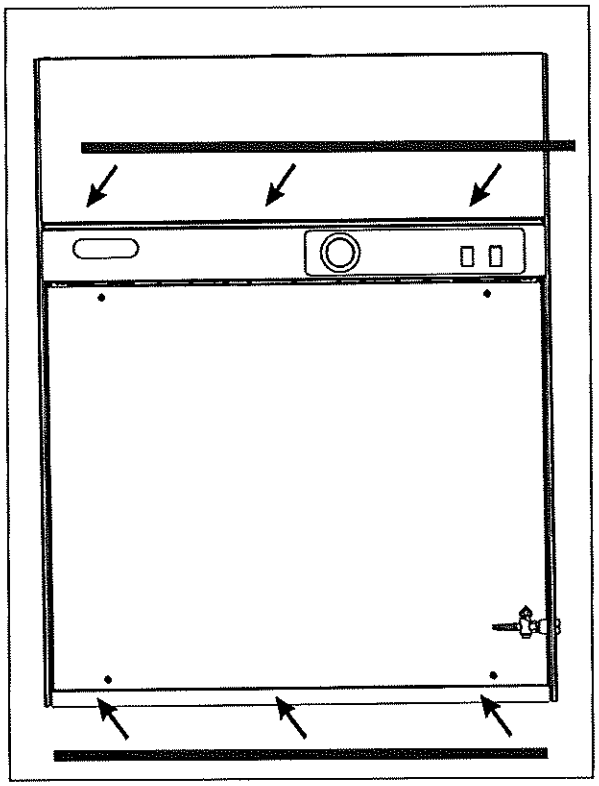

Vibration Isolation Table

Labconco offers an accessory Vibration Isolation Table, part number 36180, for supporting vibration sensitive apparatus within the clean bench.

Your Next Step

After you understand the maintenance procedures, you are ready to proceed to *Chapter 8: Troubleshooting*.

CHAPTER 8
TROUBLESHOOTING

Refer to the following table if your Purifier Clean Bench fails to operate properly. If the suggested corrective actions do not solve your problem, contact Labconco Product Service for additional assistance.

PROBLEM	CAUSE	CORRECTIVE ACTION
Blower and lights won't turn on	Unit not plugged into outlet	Plug the clean bench into appropriate electrical service.
	Circuit breakers tripped	Reset circuit breakers.
Lights work but motor won't run	Speed control out of adjustment	Have speed control adjusted by a qualified certifier.
	Defective speed control	Replace speed control.
	Defective motor	Replace motor.
Pressure gauge reading increases (more than 0.1 in.)	Blockage of the prefilter or diffuser	Ensure that both the prefilter and diffuser are clear.
	HEPA filter loading	The gauge reading will increase when the HEPA filter is plugged.
Contamination of work in the clean bench	Improper technique or procedure for the clean bench	See *"Use of the Clean Bench"* section of this manual.

PROBLEM	CAUSE	CORRECTIVE ACTION
Contamination of work in the clean bench (cont.)	External factors are disrupting the clean bench airflow patterns or acting as a source of contamination	See *"Installation"* section of this manual.
	Clean bench is out of adjustment/HEPA filter(s) are defective	Have clean bench recertified.
Excessive vibration	Motor/blower out of adjustment Application requires equipment isolation	Accessory vibration table. See page 53.

Appendix A
Purifier Horizontal Clean Bench Components

Illustration A-1 indicates the location of the following service parts:

Purifier Horizontal Clean Bench Replacement Parts

Item	Quantity	Part No.	Description
1	1	1489000	HEPA Filter 3-foot
1A	1	1489002	HEPA Filter 4-foot
1B	1	1489001	HEPA Filter 6-foot
2	1	3765800	Motor/Blower Assembly, 115 VAC 3-foot
2A	1	3765801	Motor/Blower Assembly, 115 VAC 4-foot
2B	2	3765800	Motor/Blower Assembly, 115 VAC 6-foot
2C	1	3765900	Motor/Blower Assembly, 230 VAC 3-foot
2D	1	3765901	Motor/Blower Assembly, 230 VAC 4-foot
2E	2	3765900	Motor/Blower Assembly, 230 VAC 6-foot
3	1 or 2	1211200	Motor, 115 VAC 3- and 6-foot
3A	1	1210501	Motor, 115 VAC 4-foot
3D	1 or 2	1210502	Motor, 230 VAC 3-, 4- and 6-foot
4	1	9721901	Lamp, Fluorescent, 3-foot
4A	1	9721900	Lamp, Fluorescent, 4-foot
4B	1	1278400	Lamp, Fluorescent, 6-foot
5	1	1271300	Lamp, UV, 3- and 4-foot (not shown)
5A	1	1231900	Lamp, UV, 6-foot (not shown)
6	1	3704400	Speed Control, 115V
6A	1	3704401	Speed Control, 230V
7	2	3768900	Prefilter, 3-foot
7A	2	3768901	Prefilter, 4-foot
7B	3	3768901	Prefilter, 6-foot

A-1

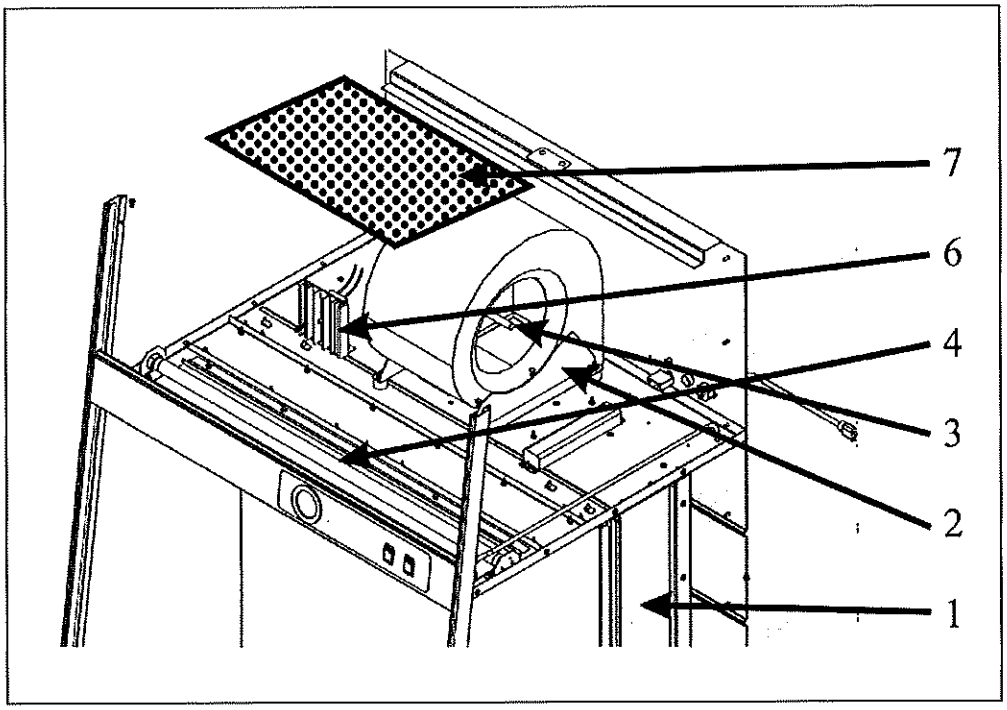

APPENDIX B
DIMENSIONS

B-1

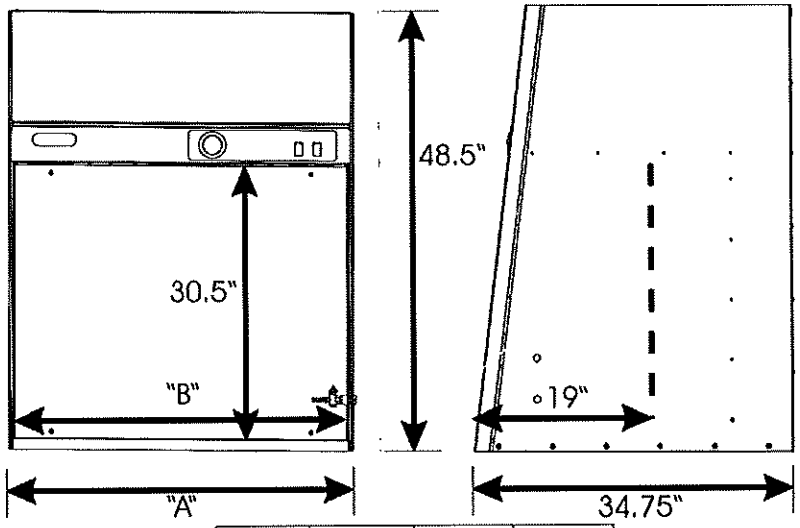

	3-foot	4-foot	6-foot
"A"	38.25"	50.25"	74.25"
"B"	37"	49"	73"

Appendix C
Clean Bench Specifications

Electrical Data

Bench Model	Electrical Requirements
3600000 to 3600009	115 VAC – 60 Hz, 1 Phase – 12 Amps
3612500 to 3612509	115 VAC – 60 Hz, 1 Phase – 12 Amps
3610000 to 3610009	115 VAC – 60 Hz, 1 Phase – 16 Amps

Bench Model	Electrical Requirements
3600020 to 3600029	230 VAC – 50/60 Hz, 1 Phase – 7 Amps
3612520 to 3612529	230 VAC – 50/60 Hz, 1 Phase – 7 Amps
3610020 to 3610029	230 VAC – 50/60 Hz, 1 Phase – 8 Amps

Motor Specifications

Bench Model	Electrical Requirements
3600000 to 3600009 3610000 to 3610009	115 VAC – 60 Hz, 3.8 Full Load Amps 1/3 H.P. 1625 RPM Automatic Thermal Protection

Bench Model	Electrical Requirements
3612510 to 3612519	115 VAC – 50/60 Hz, 6.0 Full Load Amps 1/2 H.P. 1625 RPM Automatic Thermal Protection

Bench Model	Electrical Requirements
3600020 to 3600029 3612520 to 3612529 3610020 to 3610029	230 VAC – 50/60 Hz, 1.9 Full Load Amps 1/3 H.P. 1625 RPM Automatic Thermal Protection

Environmental Conditions

- Indoor use only.
- Maximum altitude: 6562 feet (2000 meters).
- Ambient temperature range: 41° to 104°F (5° to 40°C).
- Maximum relative humidity: 80% for temperatures up to 88°F (31°C), decreasing linearly to 50% relative humidity at 104°F (40°C).
- Main supply voltage fluctuations not to exceed ±10% of the nominal voltage.
- Transient overvoltages according to Installation Categories II (Overvoltage Categories per IEC 1010). Temporary voltage spikes on the AC input line that may be as high as 1500V for 115V models and 2500V for 230V models are allowed.
- Used in an environment of Pollution degrees 2 (i.e., where normally only non-conductive atmospheres are present). Occasionally, however, a temporary conductivity caused by condensation must be expected, in accordance with IEC 664.

C-1

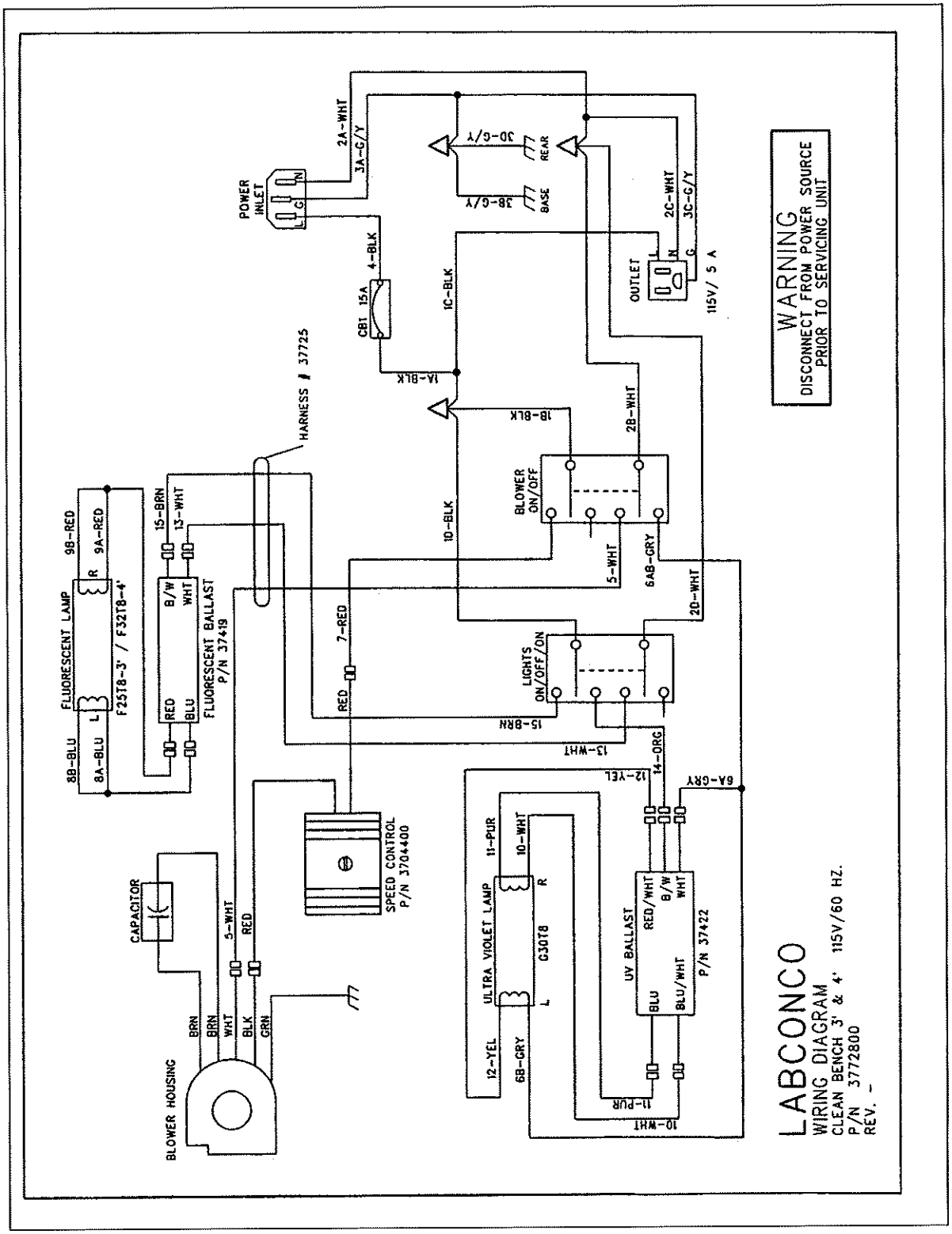
POWER INLET
2A-WHT
3A-G/Y
4-BLK
CB1 15A
1A-BLK
1C-BLK
3D-G/Y
3B-G/Y
REAR
BASE
2C-WHT
3C-G/Y
OUTLET
115V/ 5 A
WARNING
DISCONNECT FROM POWER SOURCE PRIOR TO SERVICING UNIT
HARNESS # 37725
1B-BLK
2B-WHT
BLOWER ON/OFF
1D-BLK
5-WHT
6AB-GRY
2D-WHT
LIGHTS ON/OFF/ON
7-RED
RED
15-BRN
13-WHT
14-ORG
12-YEL
6A-GRY
FLUORESCENT LAMP
F25T8-3' / F32T8-4'
9B-RED
9A-RED
8B-BLU
8A-BLU
15-BRN
13-WHT
B/W
WHT
RED
BLU
FLUORESCENT BALLAST P/N 37419
CAPACITOR
5-WHT
RED
SPEED CONTROL P/N 3704400
BLOWER HOUSING
BRN
BRN
WHT
BLK
GRN
ULTRA VIOLET LAMP
C30T8
11-PUR
10-WHT
12-YEL
6B-GRY
UV BALLAST
RED/WHT
B/W
WHT
BLU
BLU/WHT
P/N 37422
11-PUR
10-WHT
LABCONCO
WIRING DIAGRAM
CLEAN BENCH 3' & 4' 115V/60 HZ.
P/N 3772800
REV. -

C-2

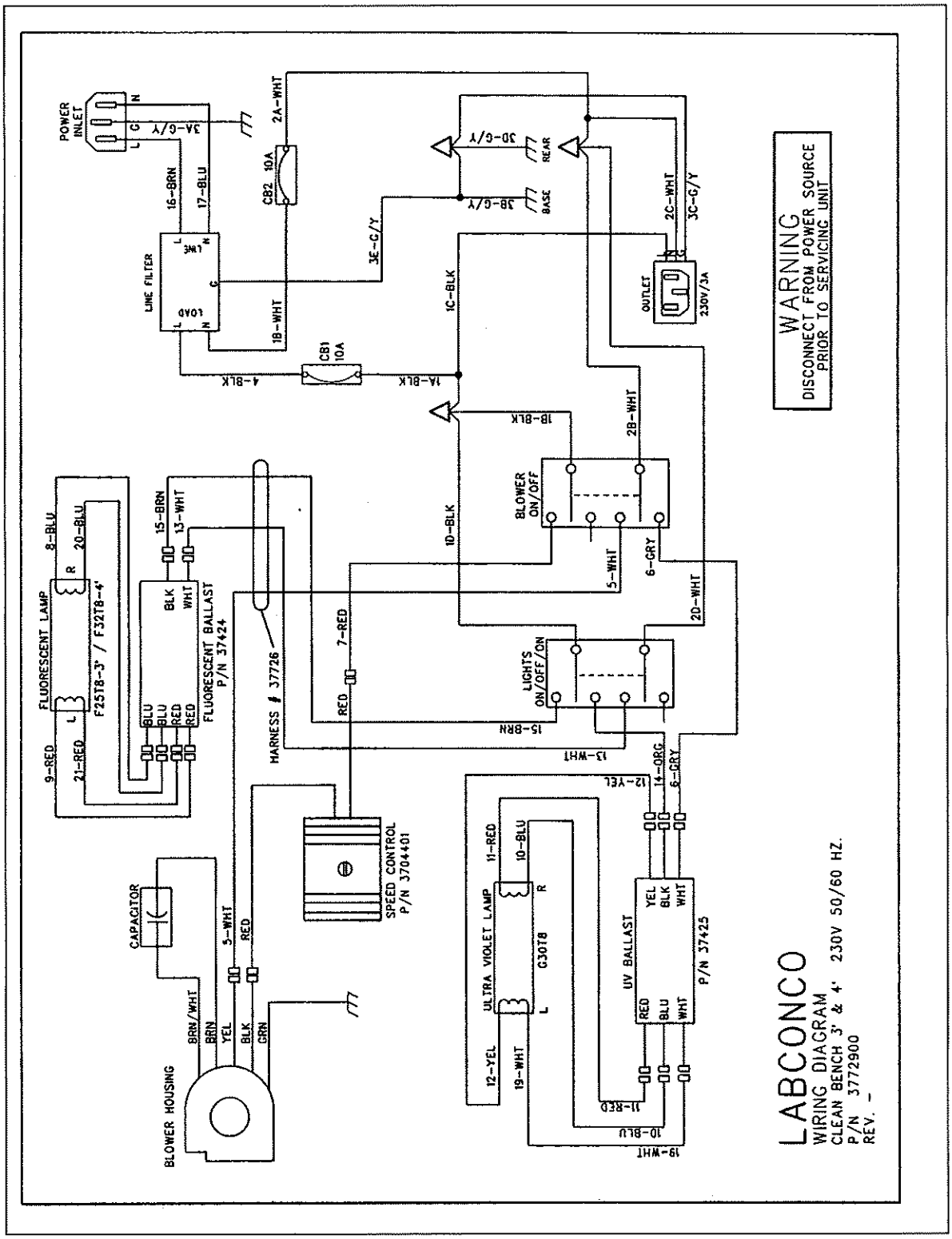
POWER INLET
3A-G/Y
2A-WHT
CB2 10A
16-BRN
17-BLU
LINE FILTER
LINE
LOAD
18-WHT
3E-G/Y
CB1 10A
4-BLK
1A-BLK
1C-BLK
3D-G/Y
REAR
3B-G/Y
BASE
2C-WHT
3C-G/Y
OUTLET
230V/3A
WARNING
DISCONNECT FROM POWER SOURCE
PRIOR TO SERVICING UNIT
1B-BLK
2B-WHT
BLOWER ON/OFF
1D-BLK
5-WHT
6-GRY
20-WHT
LIGHTS ON/OFF/ON
15-BRN
13-WHT
14-ORG
12-YEL
8-BLU
20-BLU
FLUORESCENT LAMP
F25T8-3' / F32T8-4'
9-RED
21-RED
15-BRN
13-WHT
BLK
WHT
FLUORESCENT BALLAST
P/N 37424
BLU
BLU
RED
RED
MARNESS # 37726
7-RED
RED
SPEED CONTROL
P/N 3704401
CAPACITOR
5-WHT
RED
BLOWER HOUSING
BRN/WHT
BRN
YEL
BLK
GRN
11-RED
10-BLU
ULTRA VIOLET LAMP
G30T8
12-YEL
19-WHT
UV BALLAST
YEL
BLK
WHT
RED
BLU
WHT
P/N 37425
11-RED
10-BLU
19-WHT
LABCONCO
WIRING DIAGRAM
CLEAN BENCH 3' & 4' 230V 50/60 HZ.
P/N 3772900
REV. _

C-3

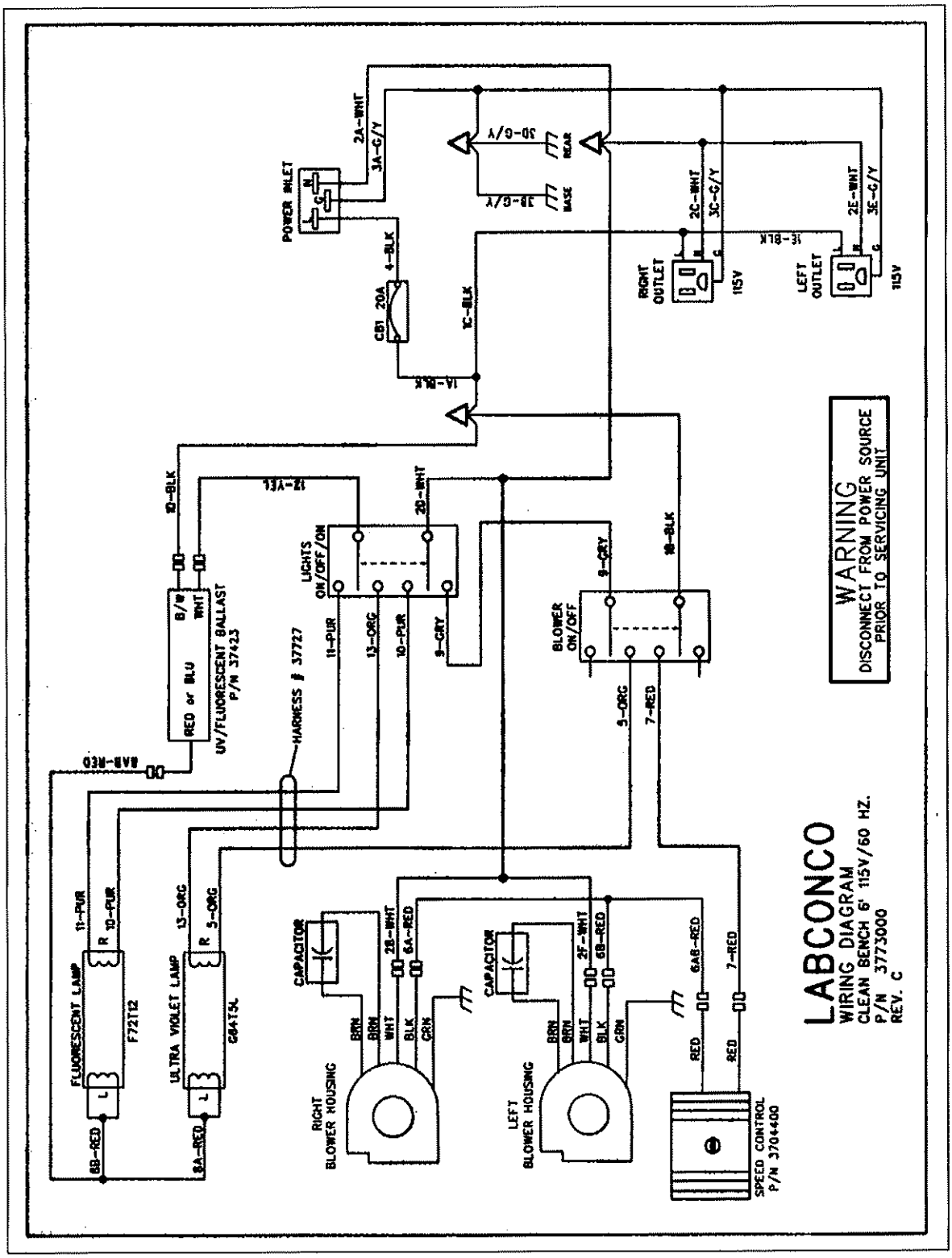
LABCONCO
WIRING DIAGRAM
CLEAN BENCH 6' 115V/60 HZ.
P/N 3773000
REV. C
WARNING
DISCONNECT FROM POWER SOURCE
PRIOR TO SERVICING UNIT
POWER INLET
CB1 20A
RIGHT OUTLET
LEFT OUTLET
115V
LIGHTS ON/OFF/ON
BLOWER ON/OFF
UV/FLUORESCENT BALLAST
P/N 37423
HARNESS # 37727
FLUORESCENT LAMP
F72T12
ULTRA VIOLET LAMP
G64T5L
CAPACITOR
RIGHT BLOWER HOUSING
LEFT BLOWER HOUSING
SPEED CONTROL
P/N 3704400

C-4

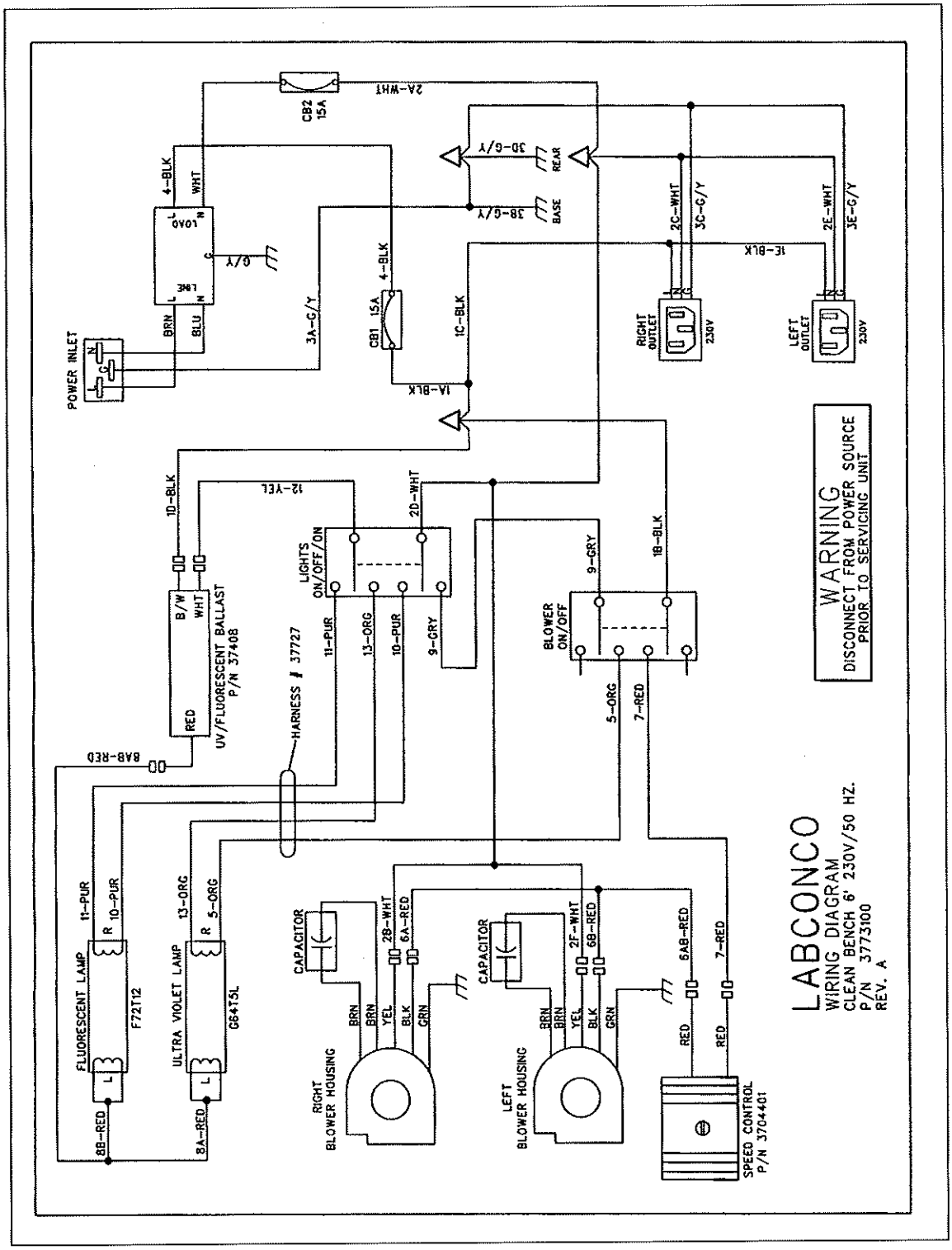
LABCONCO
WIRING DIAGRAM
CLEAN BENCH 6' 230V/50 HZ.
P/N 3773100
REV. A
WARNING
DISCONNECT FROM POWER SOURCE
PRIOR TO SERVICING UNIT
POWER INLET
LINE
LOAD
BRN
BLU
4-BLK
WHT
G/Y
CB1 15A
CB2 15A
2A-WHT
3A-G/Y
1A-BLK
1C-BLK
3B-G/Y
3D-G/Y
BASE
REAR
2C-WHT
3C-G/Y
2E-WHT
3E-G/Y
1E-BLK
RIGHT OUTLET
LEFT OUTLET
230V
1D-BLK
1B-BLK
2D-WHT
12-YEL
LIGHTS ON/OFF/ON
BLOWER ON/OFF
9-GRY
5-ORG
7-RED
11-PUR
10-PUR
13-ORG
HARNESS # 37727
UV/FLUORESCENT BALLAST P/N 37408
B/W
RED
8AB-RED
FLUORESCENT LAMP
F72T12
ULTRA VIOLET LAMP
G64T5L
8B-RED
8A-RED
CAPACITOR
2B-WHT
6A-RED
2F-WHT
6B-RED
6AB-RED
BRN
YEL
BLK
GRN
RIGHT BLOWER HOUSING
LEFT BLOWER HOUSING
SPEED CONTROL P/N 3704401

Appendix D
Purifier Horizontal Clean Bench Accessories

Adjustable Height Base Stands

Epoxy-coated steel, adjust in 1-inch increments to provide a working height from 28.5 to 36.5 inches (29.25 inches deep x 27.5 to 34.5 inches high).

Catalog #	For use with	Shipping Weight
3746701	3-foot Purifier Clean Bench	73 lbs. (33 kg)
3746702	4-foot Purifier Clean Bench	82 lbs. (37 kg)
3746704	6-foot Purifier Clean Bench	100 lbs. (45 kg)

Service Fixture Kit (# 3773700)

Includes serrated hose tip valve with quarter turn handle, hardware and instructions for plumbing to services mounts on right side interior. All cabinets are factory prepared to accept up to 2 fixtures. Shipping weight 4 lbs. (2 kg).

IV Bar Kits

Bar supports intravenous solution bottles and bags. Kits include IV bar, mounting hardware, and four hangers.

Catalog #	For use with	Shipping Weight
3697500	3- & 4-foot Purifier Clean Bench	3 lbs. (1.4 kg)
3697500	6-foot Purifier Clean Bench (2 Required)	6 lbs. (2.8 kg)

Ergonomic Chair with Armrests (# 3744000)

Chair has 6-way articulating seat and back control for personalized adjustment. Pneumatic mechanism adjusts seat height from 18.25" to 25.75". Five-leg black reinforced composite base rests on 2" ball bearing casters. Aluminum support ring. Removable arm rests. Black vinyl upholstery. Shipping weight 35 lbs. (15.9 kg).

Adjustable Footrest (# 3746000)

Elevates feet and permits angle repositioning while in use. 18.5" w x 11.5" d x 8" h. Shipping weight 6 lbs. (2.7 kg).

Vibration Isolation Table (#3618000)

Provides an isolated work surface for conducting procedures with vibration-sensitive equipment such as microscopes and balances. The table never makes contact with the clean bench so vibration from the motor/blower is not transmitted to the table. Epoxy-coated steel frame, adjust in 1" increments to provide a working height from 29.5 to 36". ADA-compliant. Four leveling feet. Work surface is laminated hard board, 30.4" w x 18" d. Overall dimensions 32.5" w x 25" d x 29.5" to 36" high. Shipping weith 110 lbs. (49.9 kg).

Appendix E
Quick Chart For Purifier Horizontal Clean Benches

Model Series	36000	36125	36100
Width (feet)	3	4	6
HEPA Filter Dims. (in.)	36 x 30 x 6	48 x 30 x 6	72 x 30 x 6
Average Velocity Reading Grid (inches)	12 x 12	12 x 12	12 x 12
Grid Distance from Diffuser (inches)	6	6	6
Grid Distance from Sidewalls (inches)	6	6	6
Average Velocity (FPM)	90 ±10	90 ±10	90 ±10
Work Area (ft^2)	7.5	10	15
Exhaust Volume Range (CFM)	600-750	800-1,000	1,200-1,500
Number of Laskin Nozzles needed	1	2	2
APPROXIMATE SETTINGS FOR NEW FILTERS			
Mag Gauge Reading	0.7 – 1.0	0.7 – 1.0	0.7 – 1.0
Motor HP	1/3	1/2	2 1/3
Speed Winding used	High	High	High
Motor Capacitator	15	15	15
Fluorescent Light(s)	F25T8/TL741	F32T8/TL741	F72T12CW
UV Light(s) (Option)	G30T8	G30T8	G64T5L/CB

APPENDIX F
REFERENCES

Many excellent reference texts and booklets are available. The following is a brief listing:

Bryan, D., and R.C. Marback. 1984. Laminar-airflow equipment certification: What the pharmacist needs to know. *American Journal of Hospital Pharmacy.* 41.1343-1348.

Personnel & Product Protection: A Guide to Biosafety Enclosures - An Industry Service Publication, Labconco Corporation. 1998. Kansas City, MO.

General Services Administration. 1988. FED-STD-209E Federal Standard – Clean Room and Work Station Requirements, Controlled Environment. Washington, D.C.

IES Recommended Practice: IES-RP-CC-002.2 Undirectional Flow Clean-Air Devices. Mt. Prospect, IL: Institute for Environmental Sciences and Technology. 2000.

Websites of Interest:

www.absa.org
www.cdc.gov
www.labconco.com
www.iest.org

DECLARATION OF CONFORMITY

Application Council Directive(s): 73/23/EEC, 89/336/EEC

Standard(s) to which conformity is declared: EN61010, EN55014, EN55104

Manufacturer's Name: Labconco Corporation

Manufacturer's Address: 8811 Prospect Avenue
Kansas City, MO 64132 USA

Importer's Name: See Shipping/Customs Documents*

Importer's Address: See Shipping/Customs Documents for your equipment

Type of Equipment: Laboratory Equipment – Clean Bench

Model No.: Clean Bench Laboratory Work Enclosure
3600020, 3600024 or
3612520, 3612524 or
3610020, 3610024

Serial No.: Various – See Individual Declaration

Year of Manufacture: 2001 and Subsequent

I, the undersigned, hereby declare that the equipment specified above conforms to the above Directive(s) and Standard(s).

See individual Declaration of Conformity which will be signed by the importer for your country.

Place: _____
(Signature)

Date: _____
(Full Name)

_____
(Position)

*An individual version of this declaration is included with your shipping/customs documentation.

Labconco P/N 36960-07, Rev. B, ECO B296